seepex®.com

all things flow

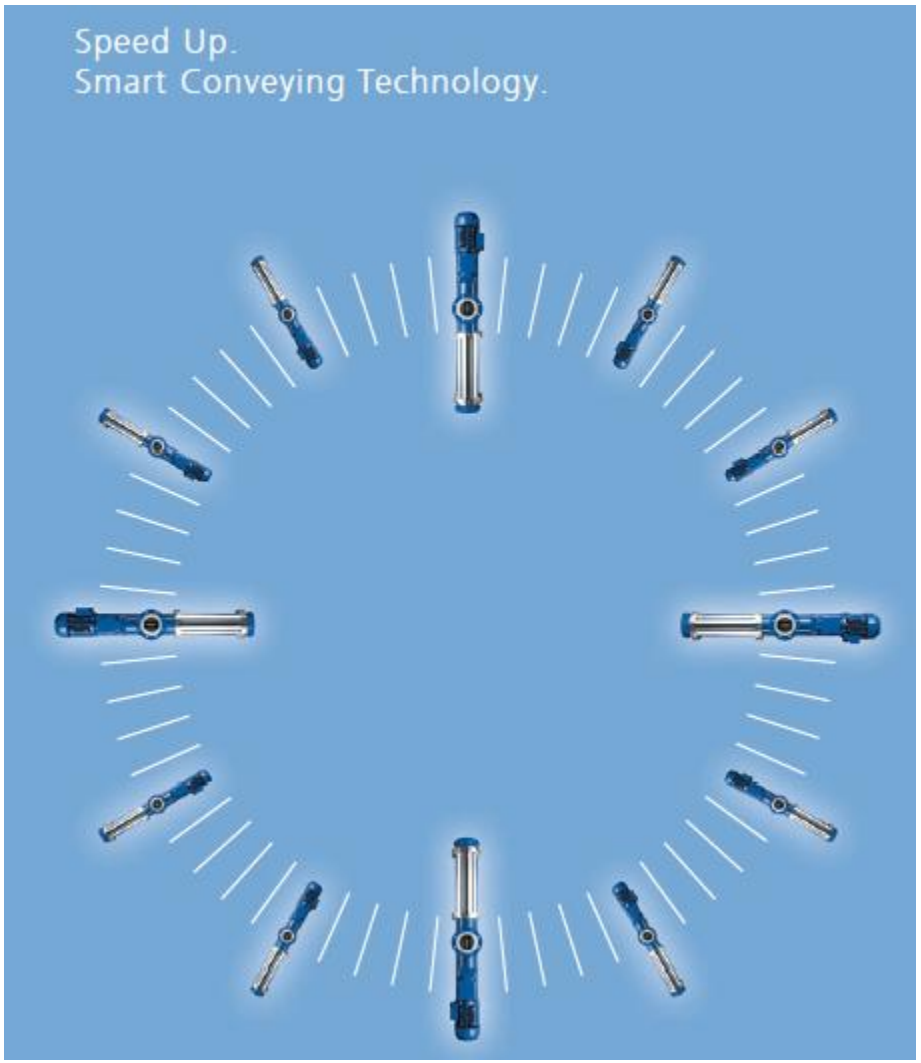

Speed Up

Our aim has always been to develop conveying solutions which are efficient, economical, ecologically friendly and meet the requirements of our global customers.

Smart Stator Technology created 2008 has been successfully installed into thousands of pumping applications globally.

The satisfaction seen from our customers and the positive responses with this technology have spurred us on to generate even greater time savings in your conveying process

‘Smart Conveying Technology’ is the next development after Smart Stator Technology, which is further improved by the ease of which the rotor can be replaced in a few simple steps, requiring minimal time.

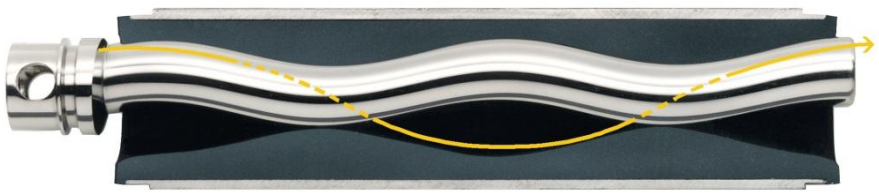

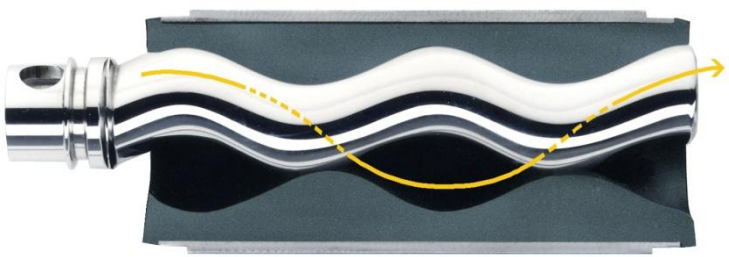

seepex have introduce numerous improvements to its geometry and ranges over the years.

SCT is a fundamental change to the conventional design of a progressive cavity pump.

What is SCT

seepex.com

Smart Conveying Technology

SST = Smart Stator Technology

SRT = Smart Rotor Technology

SCT = Smart Conveying Technology

SST + SRT = SCT

Smart Stator + Smart Rotor = SCT

Smart Stator + Smart Rotor + Smart ??? = SCT

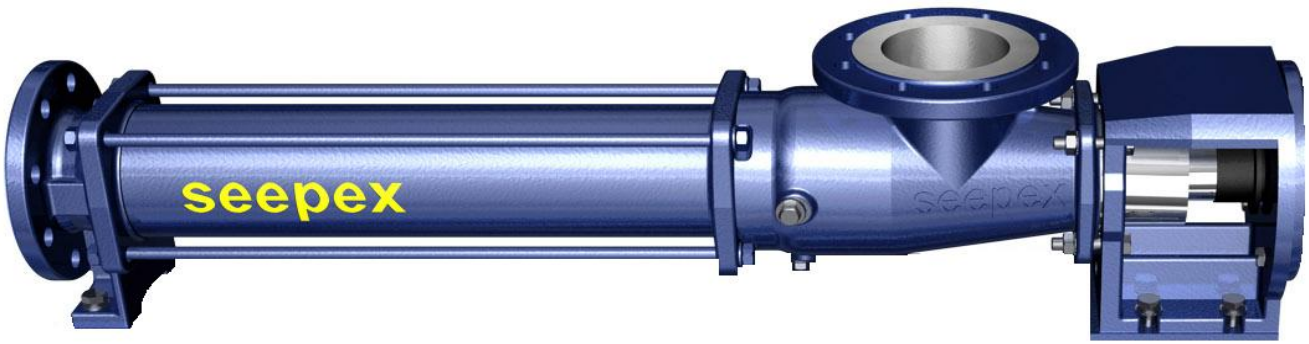
seepex

Smart Conveying Technology

“ Smart Conveying Technology“ provides the fastest possible maintenance times for your pump.

Assembling and dismantling seepex pumps has never been easier, and the life cycle costs of our pumping solutions have never been lower.

Progressive cavity pumps with “Smart Conveying Technology” can transfer a variety of products in almost every fluid process.

With this innovation, we guarantee that your conveying product will reach its destination with less cost.

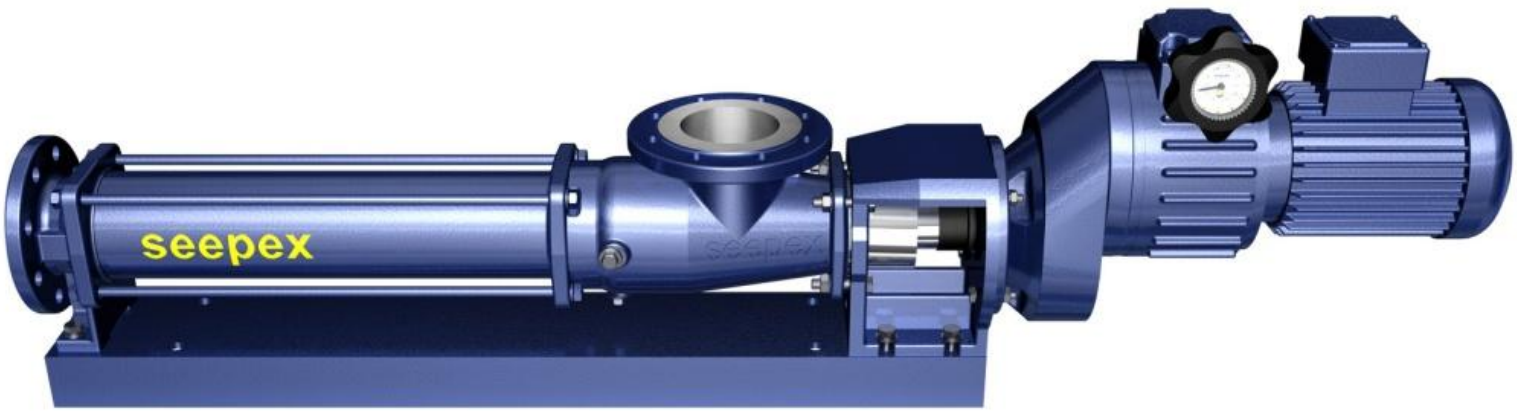

Bnpump.mp4

Hyperlink to Conventional stator replacement animation

Bnpump.mp4

Hyperlink to SCT stator and rotor replacement animation

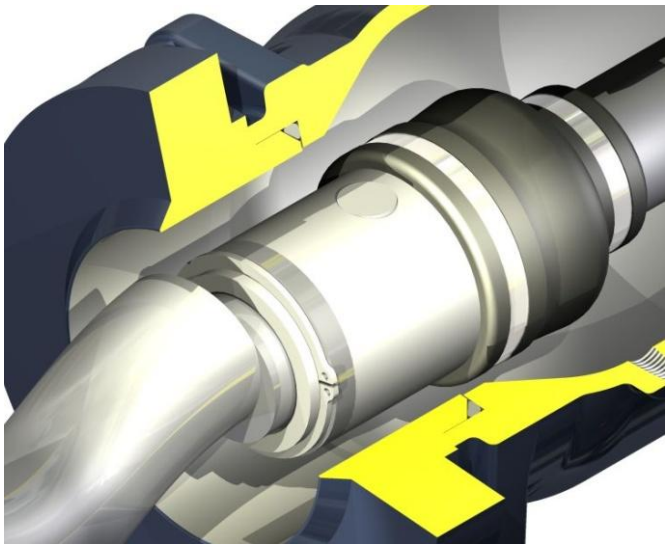

Smart Rotor detail

Hyperlink to smart rotor animation

The innovation in detail

The Smart Conveying Technology allows for quick and easy change of BOTH rotor and stator without dismantling pipework

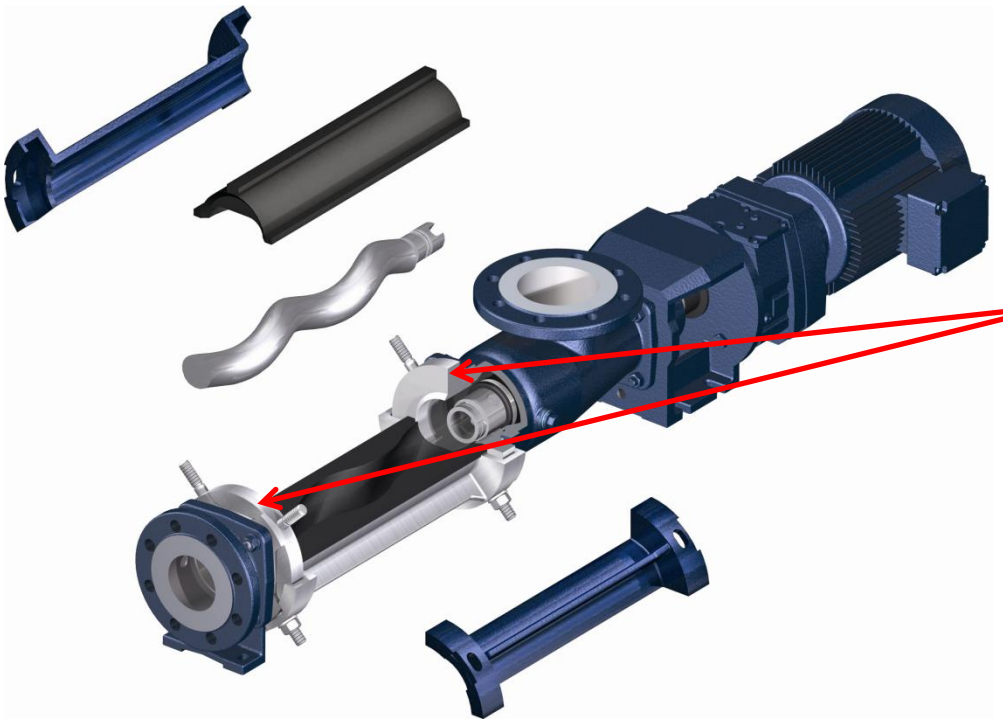

Segment retainer
Two retainers for positioning and adjusting of the stator halves

The ability to re-adjust increases the life of the rotor and stator by upto 200%

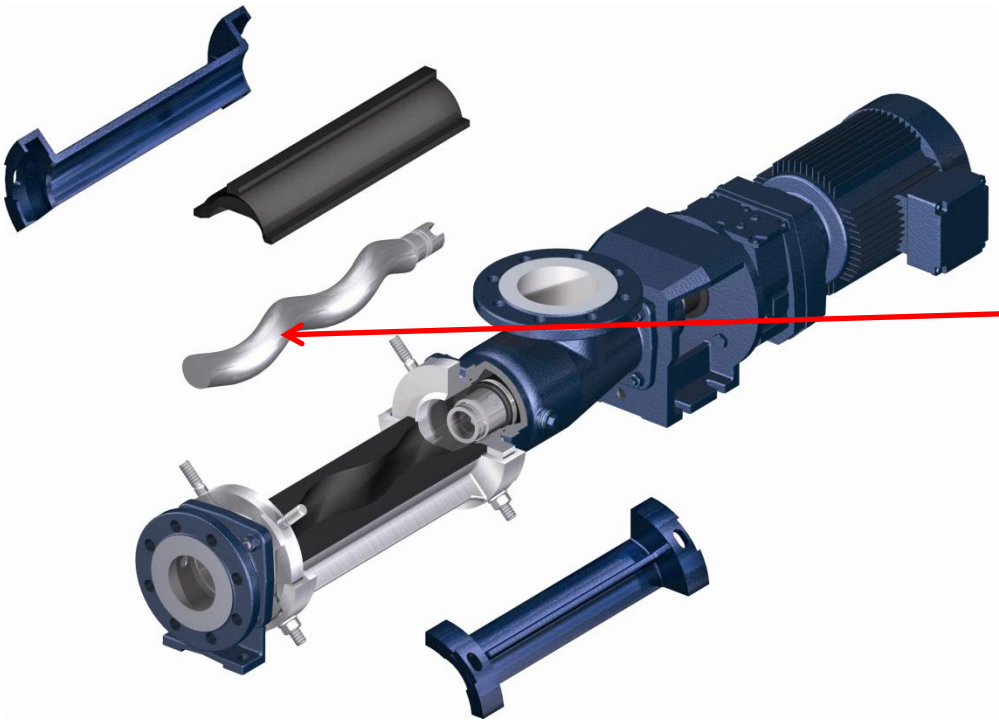

Smart-Rotor
Complete with detachable connection for quick and easy dismantling and re-assembly

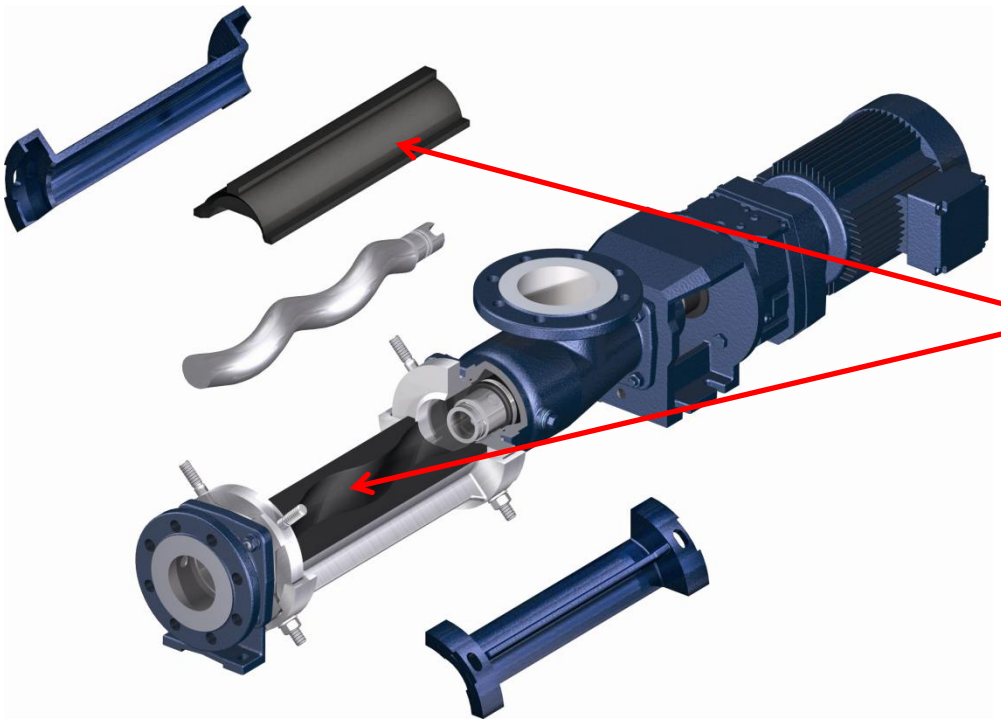

Smart-Stator
Consisting of 2 stator halves allowing maintenance, routine inspections and blockage removals to be completed in minutes

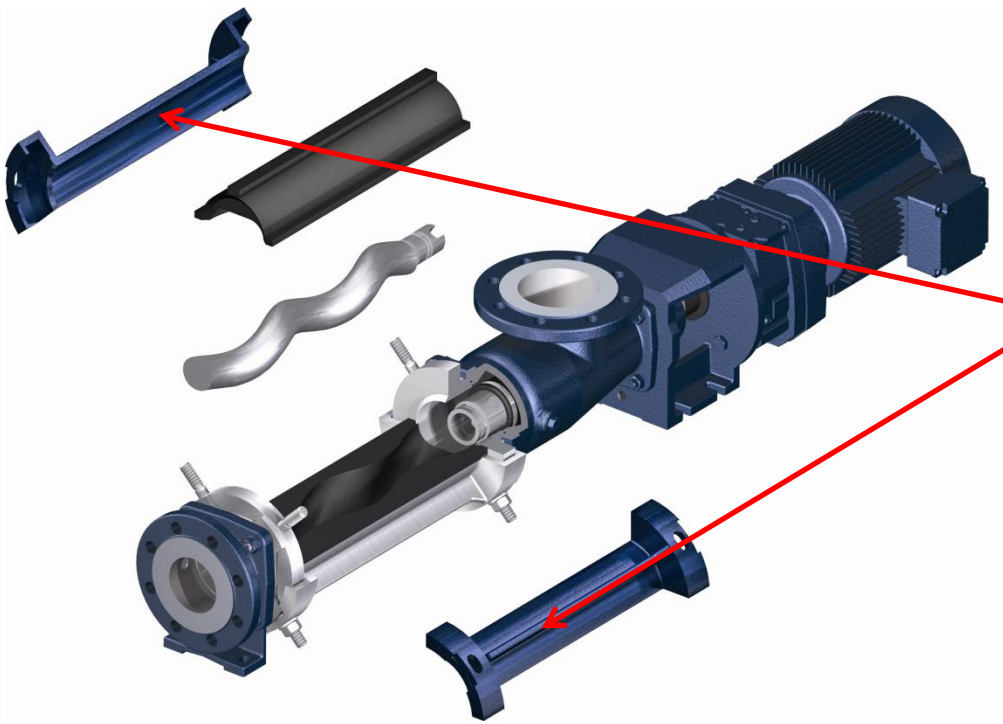

Adjusting segments
Four segments seal and adjust the stator halves and adjust the stator clamp to suit the application.

The design of SCT also allows the stator to be re-adjusted when wear takes place therefore increasing the time between maintenance

The ability to re-adjust increases the life of the rotor and stator by up to 200%

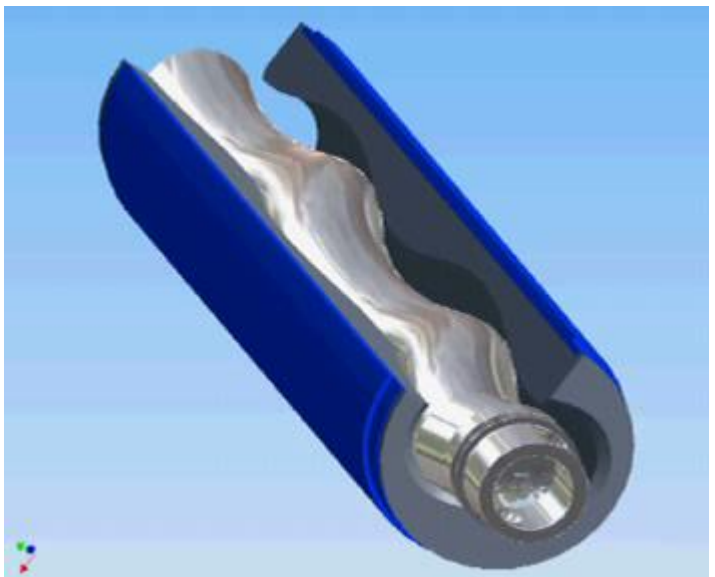

Easier Maintenance

- Easier re-assembly of new components
- Interference fit between rotor and stator creates a sealing line

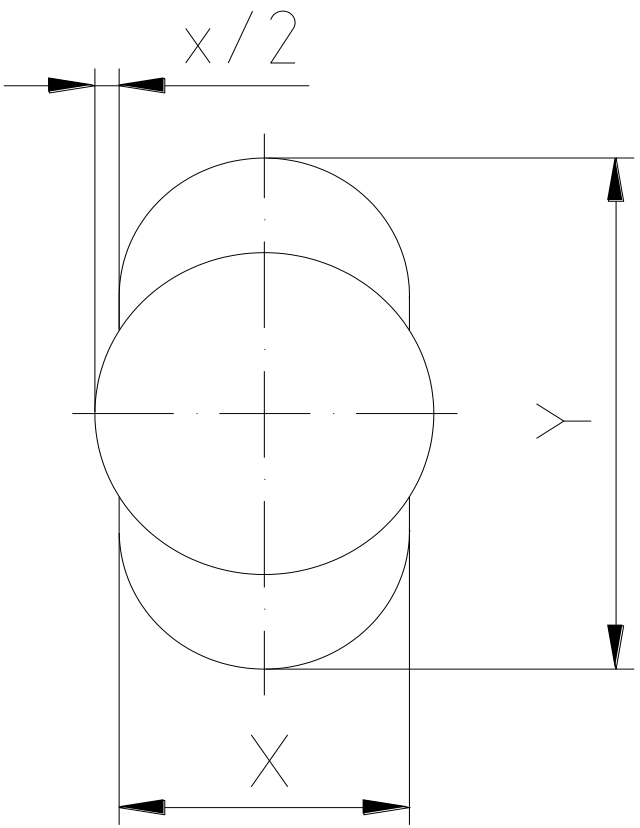

Smart Stator Technology

SST can be supplied on a new pump

or

Retro-fitted onto existing BNand BTQ range pumps

Easy to retro-fit to existing installed pumps

- No pipe work modifications
- No dimensional difference from pumps with conventional stator

Environmentally friendly

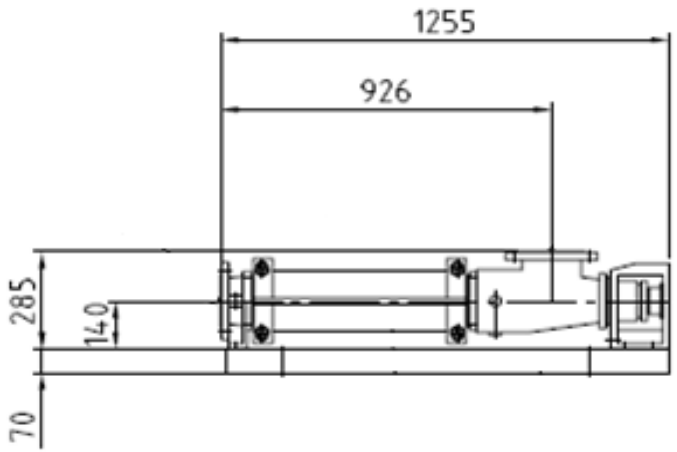

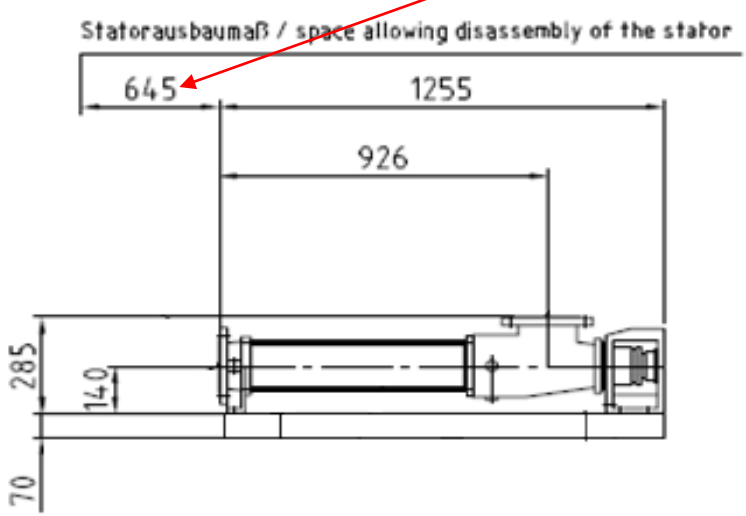

Easy to retro-fit to existing installed pumps

- No pipe work modifications
- No dimensional difference from pumps with conventional stator
- No dismantling distance required
- Can be fitted into smaller existing buildings
- Smaller footprint
- New buildings can be designed and built smaller

No need to dismantle the discharge pipe work

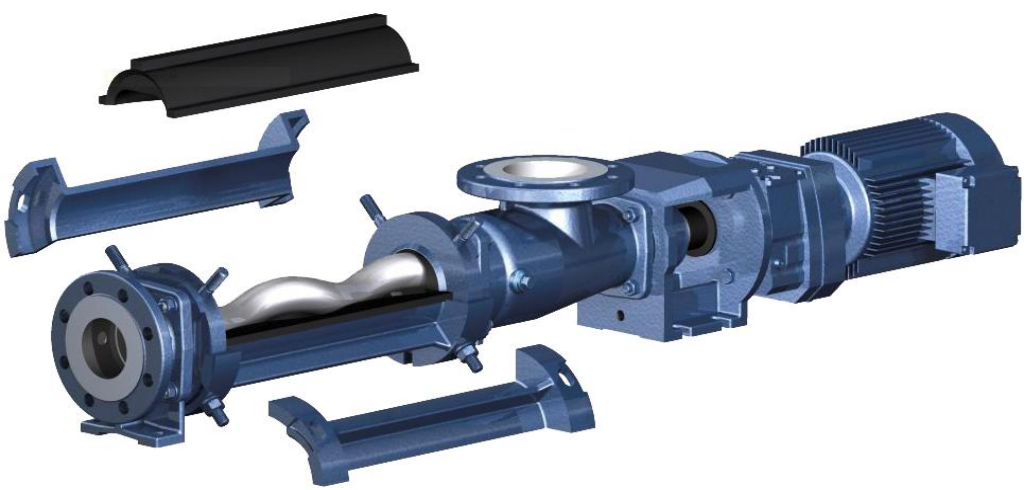

Ease of installation

- Mis-aligned pipework is no longer an issue

Stator can be re adjusted to compensate for wear

= the only tool required to inspect wearing parts or change the stator

Re-adjustable stator

At this point a conventional stator would need to be removed

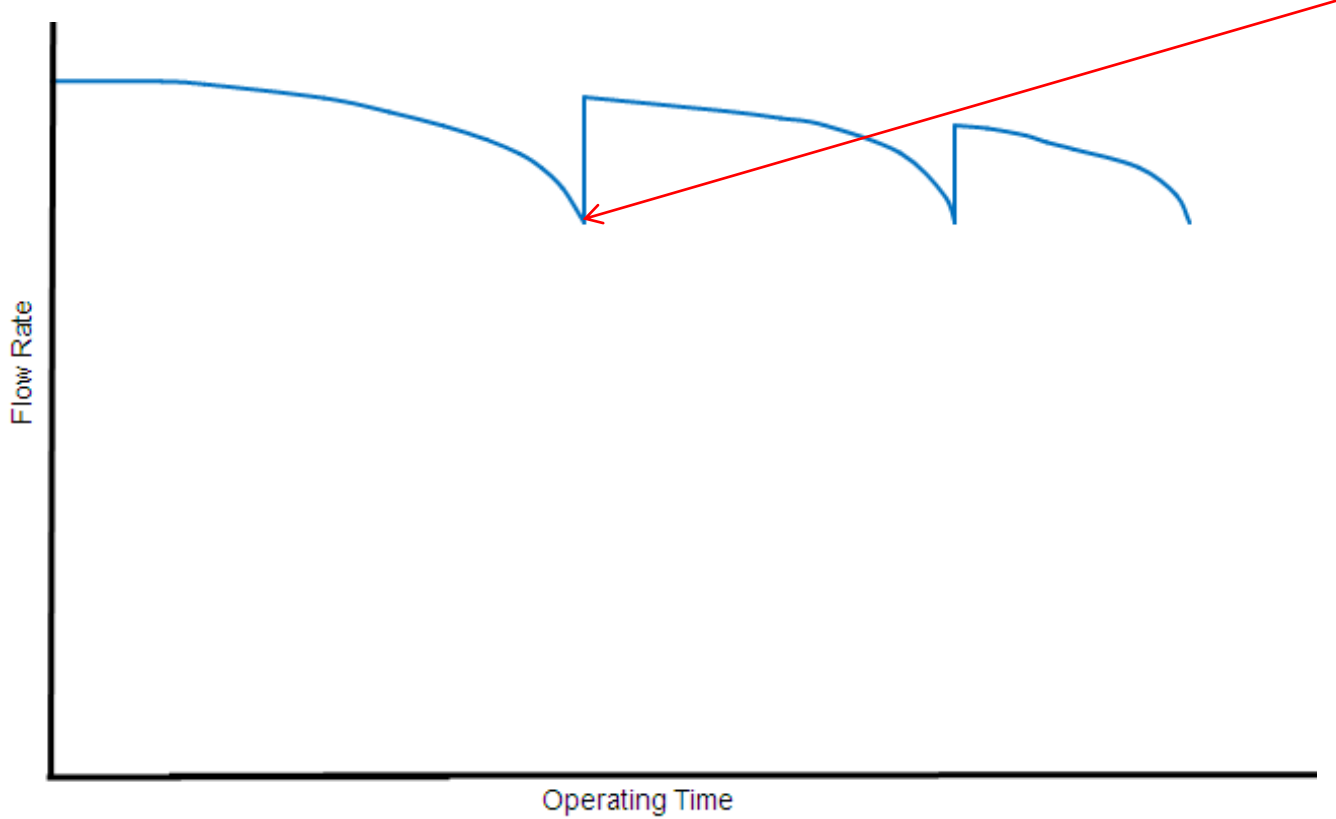

Ragging > SCT upgrade

Easier Maintenance

- Blockages are easily cleared

Speed Up - Smart Conveying Technology

- Lighter components, easier manual handling
- One person can work on larger pumps
- Simplifies Health and Safety

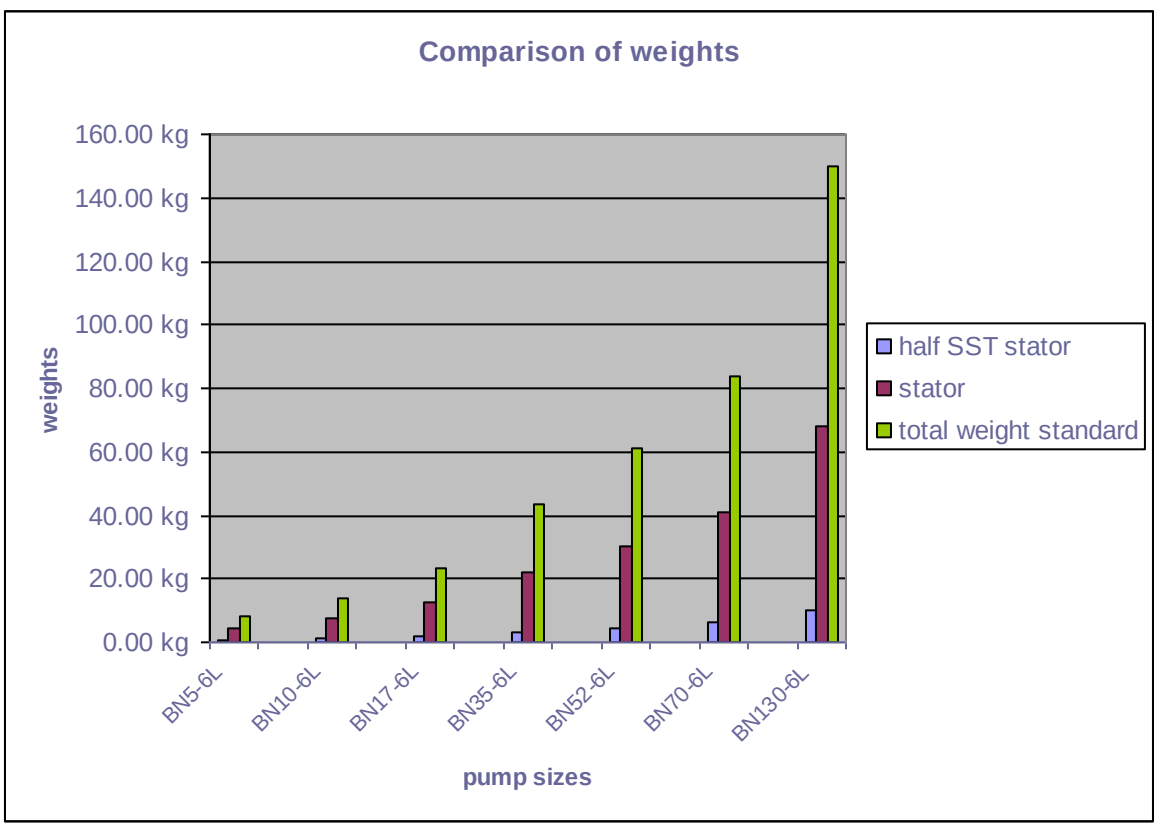

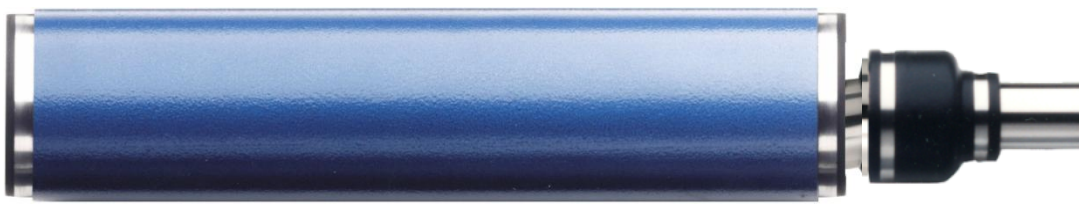

Pump size 150m³/hr

Comparison of weights:

- Complete rotor, stator, universal joint and ½ coupling rod 165 kg ~
- seepex 130-6L SST stator half 11 kg
- One person can work on larger pumps
- Simplifies Health and Safety

Environmentally friendly

- Less waste produced
- Only stator halves are replaced when worn
- Cost of disposal is reduced
- Easily recycled
- Reduced carbon footprint

seepex®.com

all things flow

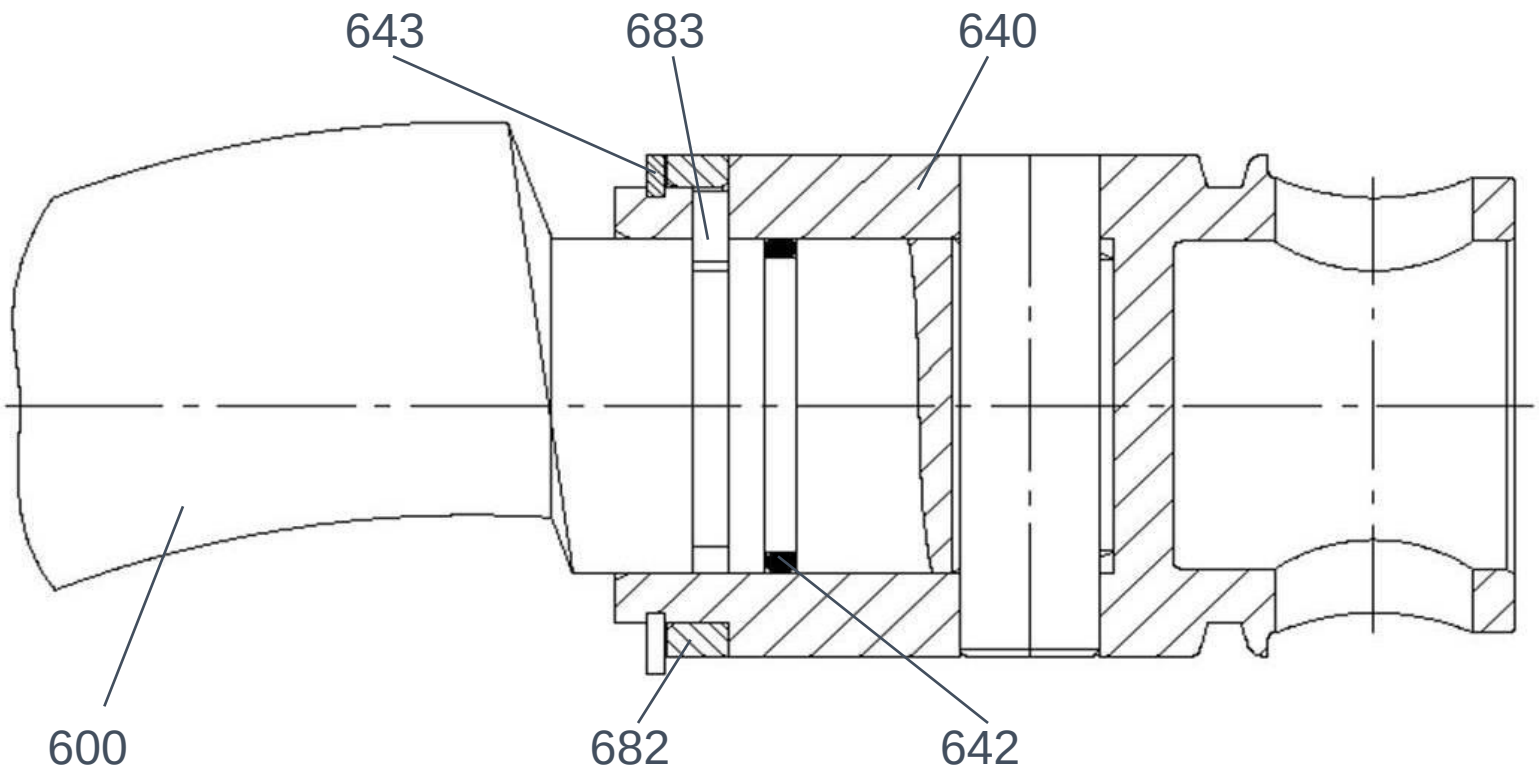

Item	Denomination	Remarks
600	Rotor	with 6LS geometry
640	Rotor head	with pressed-in rotor head pin
642	O-ring	NBR
643	Circlip	DIN 471, Material: 1.4122
682	Support ring	
683	Locking plate	Material 1.4462

Smart Rotor

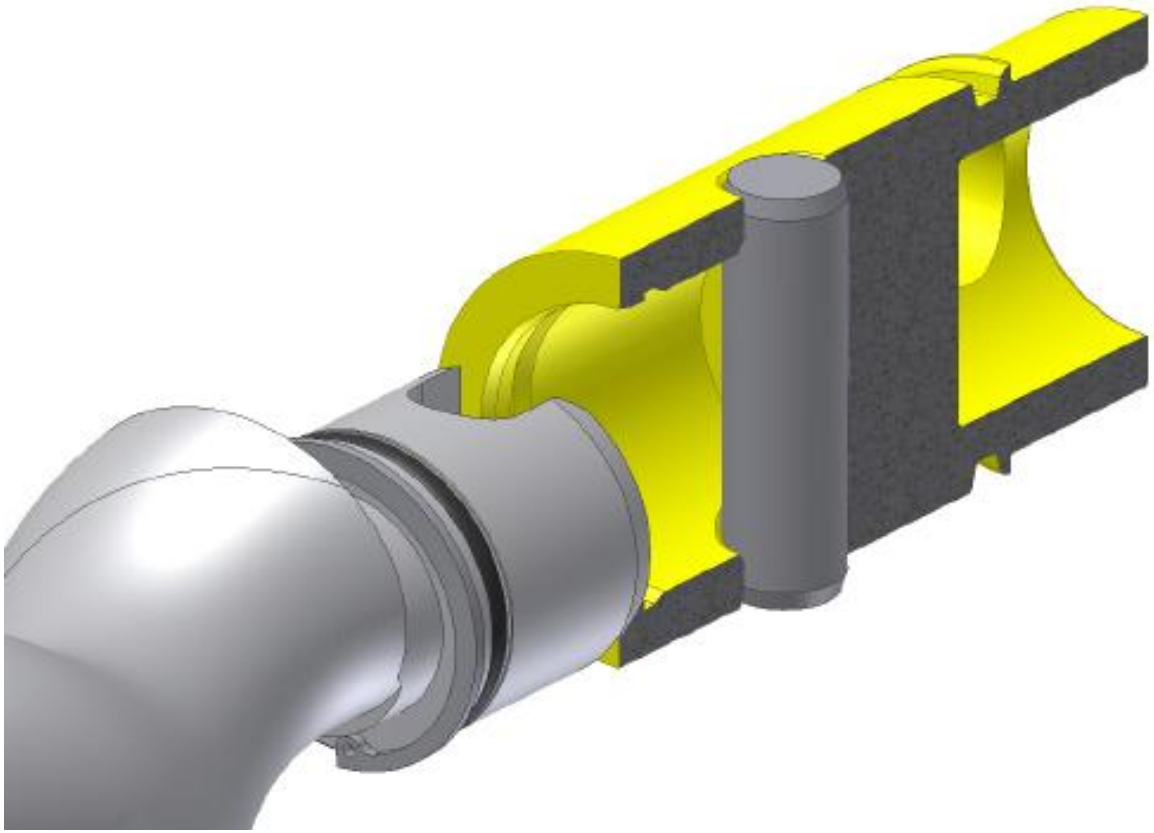

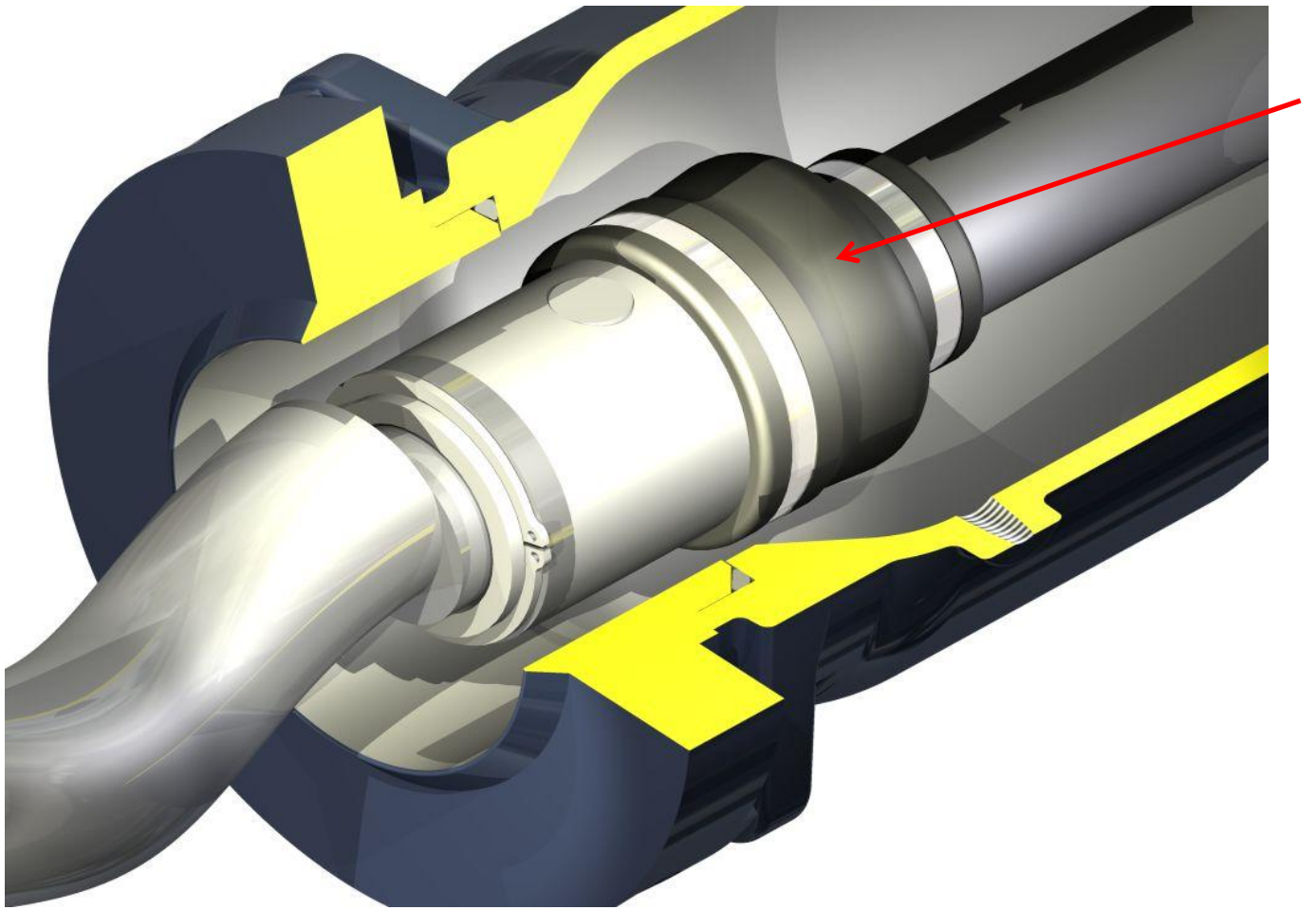

Utilises existing universal joint parts

Smart Rotor

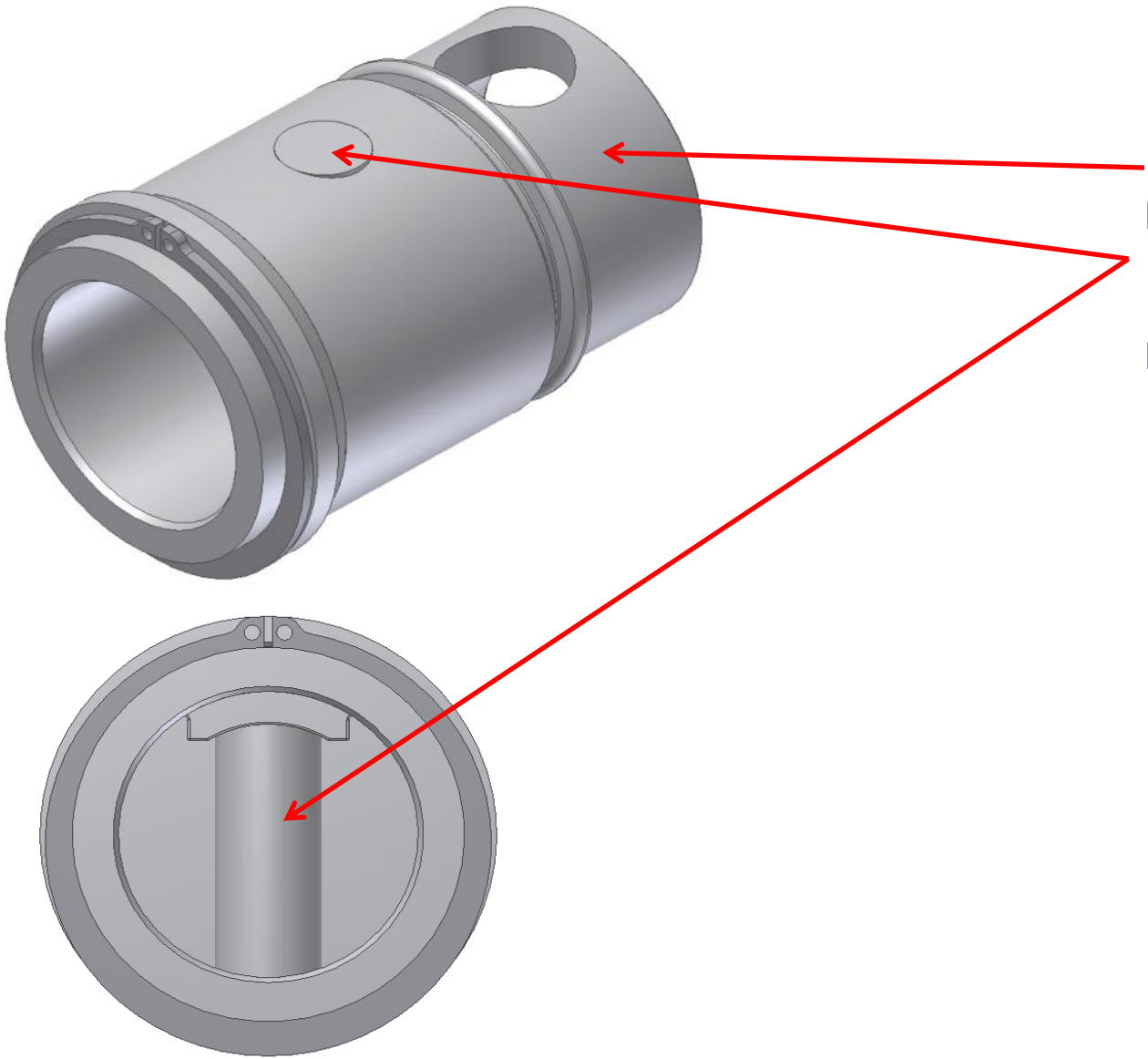

Extended rotor head

Pre- fixed pin for locating rotor fork

Smart Rotor

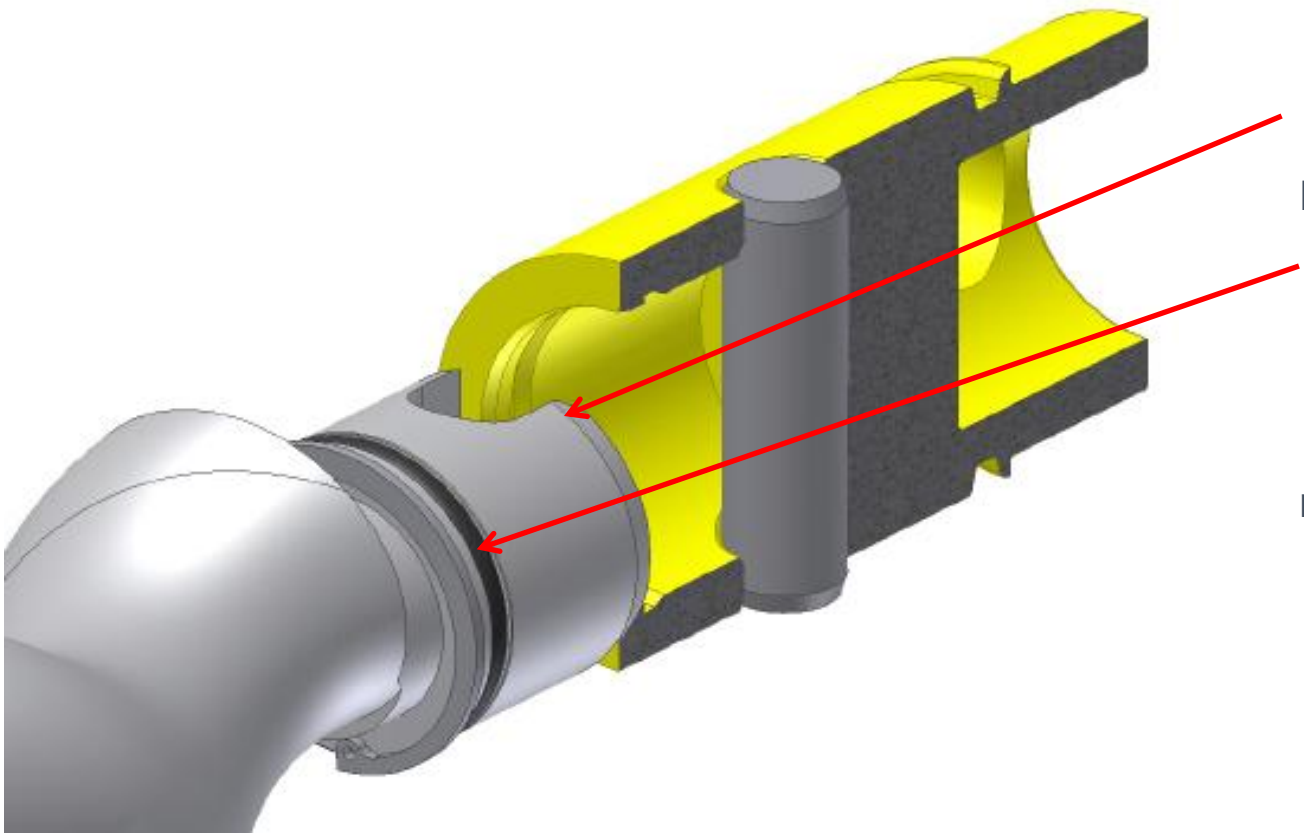

Rotor geometry has a fork design to locate on pre-fixed pin

Sealed by O ring located in machined groove

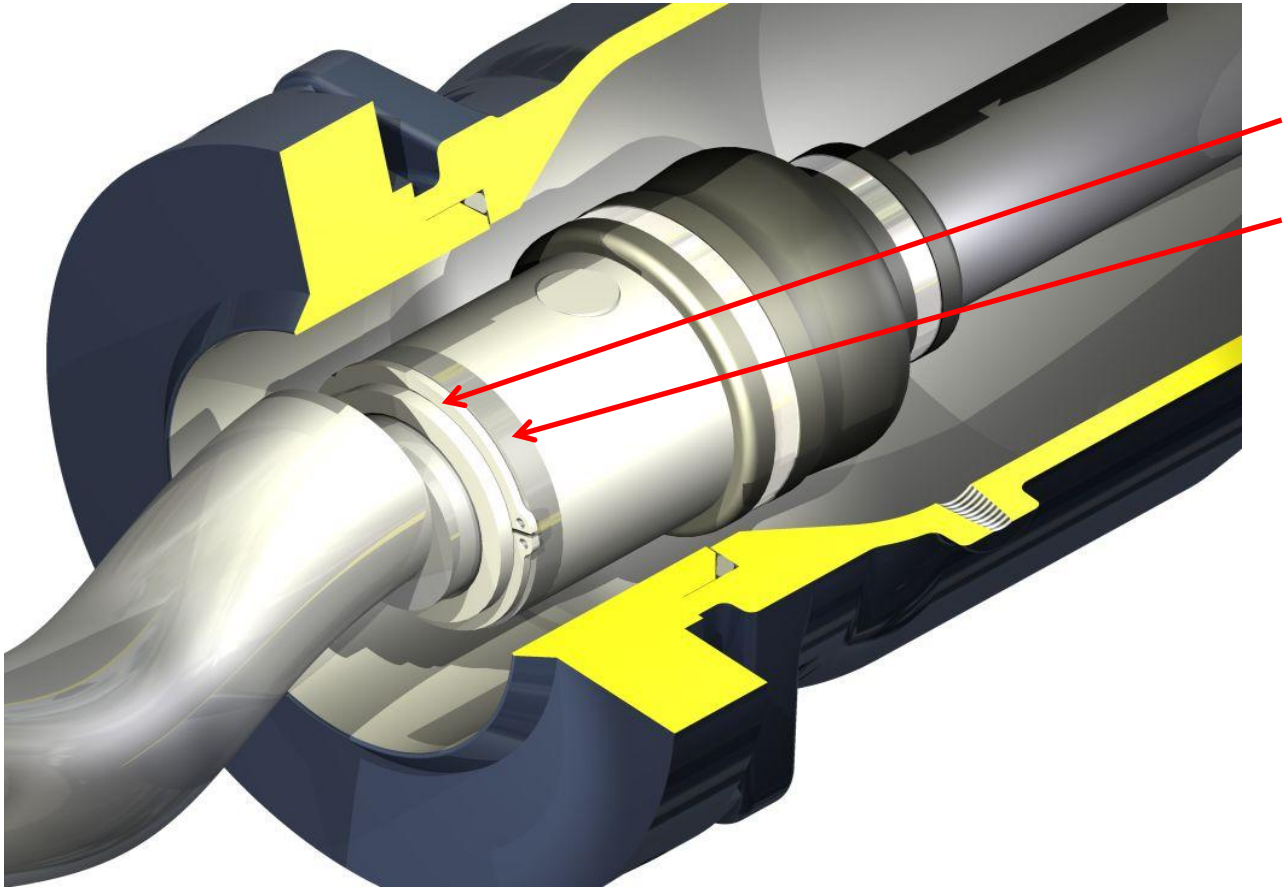

Circlip holds support ring in place

Support ring holds locking plate in place

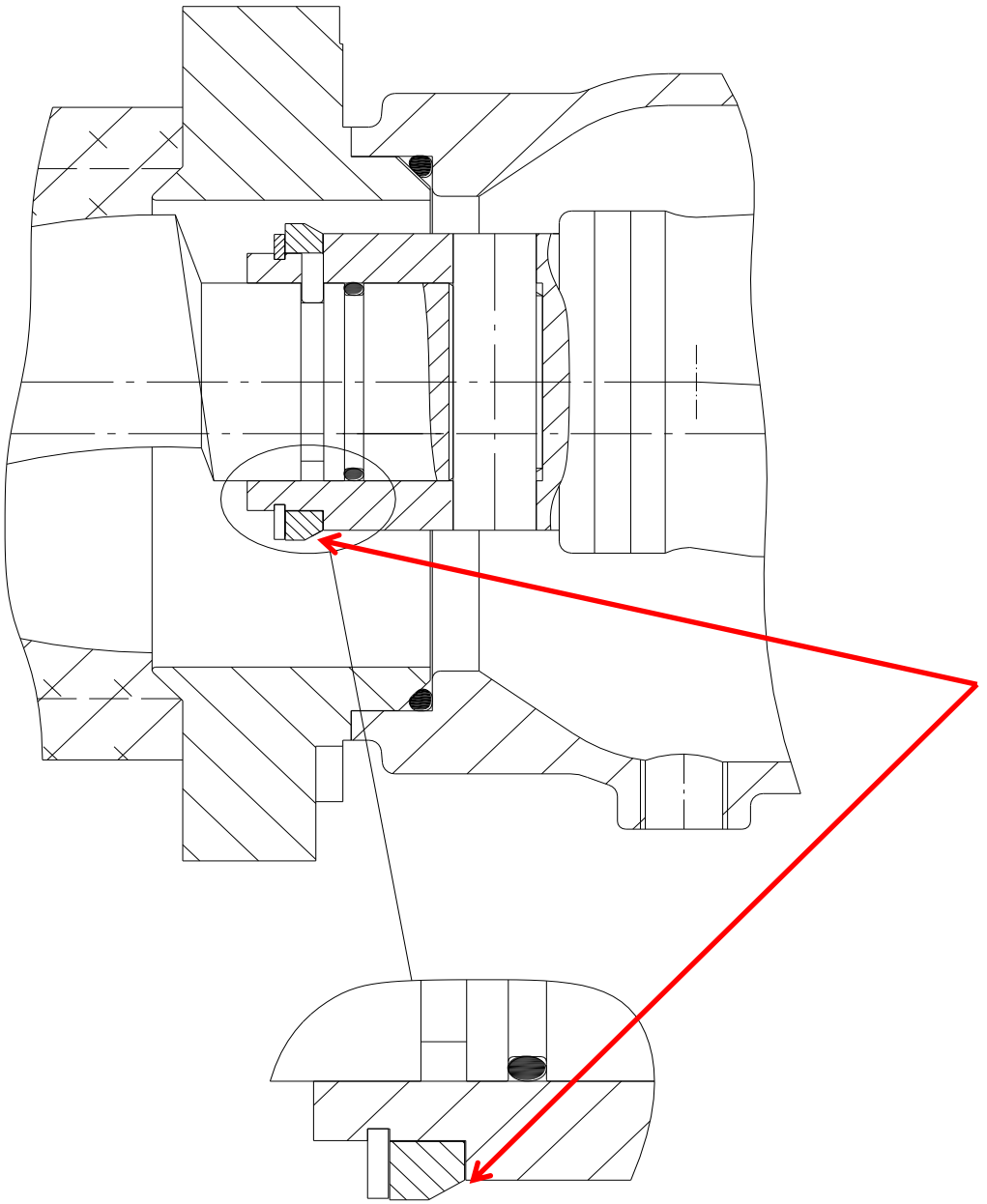

Shoulder on retaining ring to reduce possibility of debris collecting on circlip

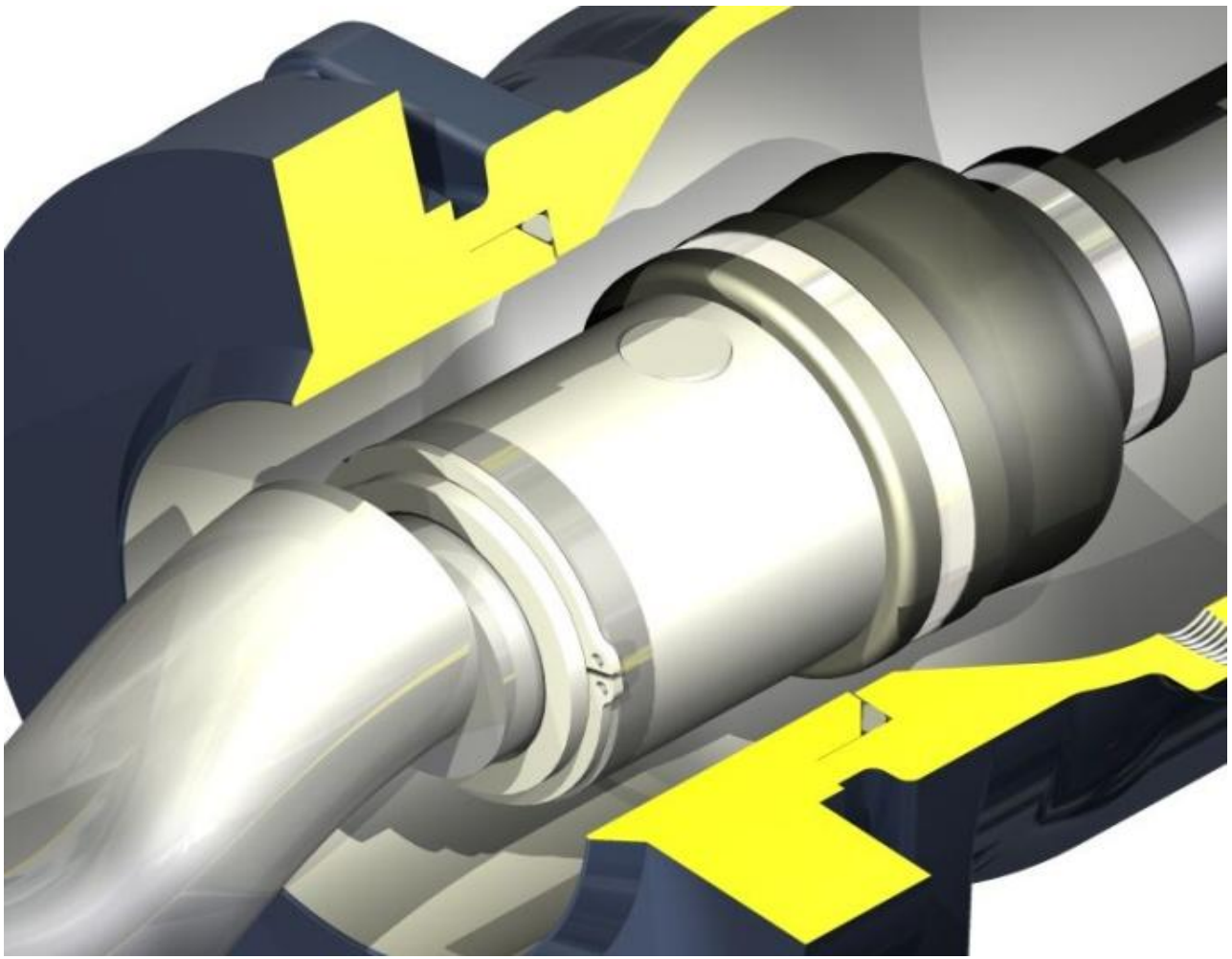

seepex®.com

all things flow

Overview of features and benefits

- Stator clamp can be adjusted to suit the duty requirement increasing the efficiency of the pump
- Increased rotor and stator life. The stator clamp can also be adjusted when the pump performance begins to reduce to re-create the required flow rate and pressure
- Quick and easy maintenance. Both the rotor and stator can be changed without dismantling the pump or pipe work
- Blockages can be cleared in minutes
- Allows visual inspection of pumping elements to enable scheduled maintenance if required

Overview of features and benefits

- Cost of ownership is reduced significantly
- Reduces maintenance time by approximately 85%
- Less down time
- Increased productivity
- Lower spare part prices
- Lighter components
- Lower transport / freight costs

Overview of features and benefits

- Environmentally friendly.
- Easier to manufacture – reduced energy – reduced carbon footprint
- Reduced waste - Only the rotor geometry is replaced when worn
- Reduced waste - Only rubber halves of stator are replaced when worn out
- Easier to recycle than conventional stators
- Smaller footprint as no allowance for stator dismantling needs to be made

Overview of features and benefits

- SCT can be retro-fitted to existing pumps
- No dimensional difference
- No need for pipe modifications
- TSE dry running protection can be fitted
- Existing Smart Stator pumps can be retro-fitted with Smart Rotors
- Can operate either clockwise or anti-clockwise

seepex®.com

all things flow